S T E A M

VECTS16
ROUND ELECTRIC TILTING BRAISING PAN

Model VECTS16 shown on optional stand

☐ **VECTS16** Round Electric Tilting Braising Pan

STANDARD FEATURES

- Stainless steel front and sides. 10 gauge polished stainless steel pan body with coved interior corners.
- Stainless steel 3/8" clad cooking surface. Formed pouring lip.
- The pan pivots on trunnions. Pan can be fully tilted.
- Solid sheathed tubular heating elements affixed to pan bottom for even heat distribution. Elements shut off when pan is tilted 5°.
- Faucet bracket.
- Controls include a snap acting thermostat adjustable from 100° to 450°F.
- Requires a 208 or 240 volt, 60 Hz, 1 or 3 phase power supply.
- One year limited parts and labor warranty.

OPTIONS

☐ Etched gallon markings.

☐ Correction facility package:
- Control cover (lock by others).
- Security type tamper resistant fasteners with tack welds.

☐ 480 volt, 50 Hz, 3 phase, includes stepdown transformer.

☐ Second year extended limited parts and labor warranty.

ACCESSORIES (Packaged & Sold Separately)

☐ 12" swing faucet, single temperature.

☐ 12" swing faucet, dual temperature.

☐ 18" swing faucet, single temperature.

☐ 18" swing faucet, dual temperature.

☐ Steaming pan insert rack to hold 12" x 20" food pan.

☐ Lift off cover.

☐ VSKT30 stand see spec sheet F-32474.

SPECIFICATIONS

Round electric tilting braising pan, Vulcan-Hart Model No. VECTS16. Stainless steel front and sides. 10 gauge polished stainless steel pan body with coved interior corners. Stainless steel 3/8" clad cooking surface. Formed pouring lip. The pan pivots on trunnions. Pan can be fully tilted. Solid sheathed tubular heating elements affixed to pan bottom for even heat distribution. Elements shut off when pan is tilted 5°. Faucet bracket. Controls include a snap acting thermostat adjustable from 100° to 450°F. Requires a 208 or 240 volt, 60 Hz, 1 or 3 phase power supply.

Exterior Dimensions:
29¼"w x 29"d x 22⅞" overall height; with handle 35¾"h.

NSF listed. UL listed.

a division of ITW Food Equipment Group LLC

P.O. Box 696 ■ Louisville, KY 40201 ■ Toll-free: 1-800-814-2028 ■ Local: 502-778-2791 ■ Quote & Order Fax: 1-800-444-0602

VECTS16
ROUND ELECTRIC TILTING BRAISING PAN

SERVICE CONNECTIONS:

Electrical Connection: Heating element power 1⅜" diameter (1" conduit). See capacity schedule.

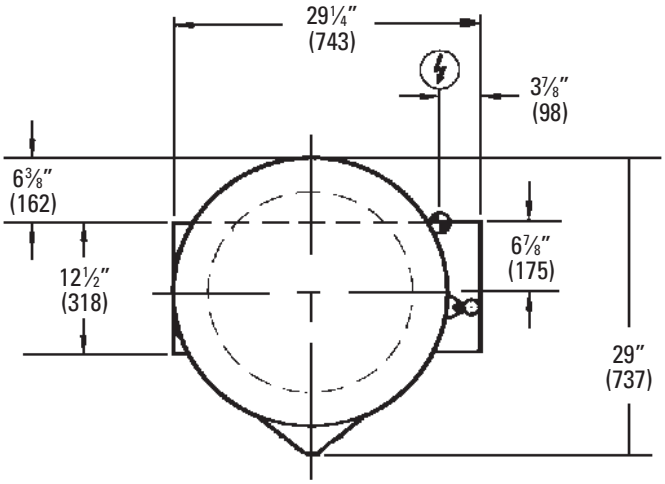

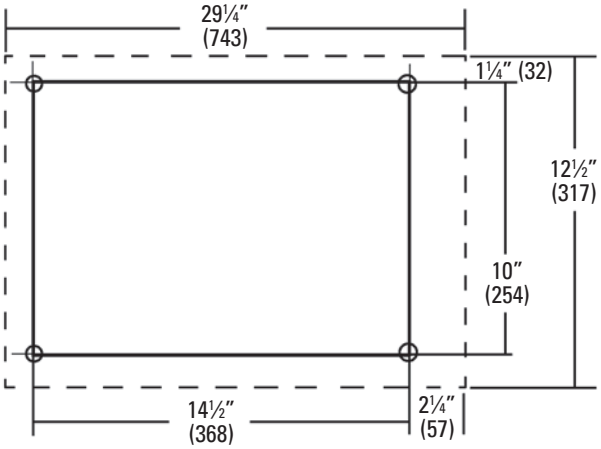

MOUNTING DETAIL

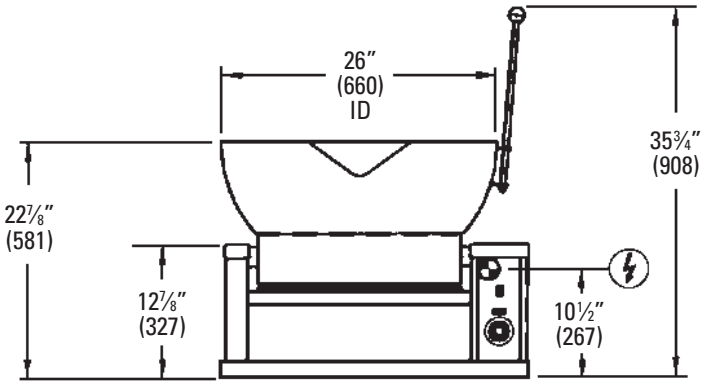

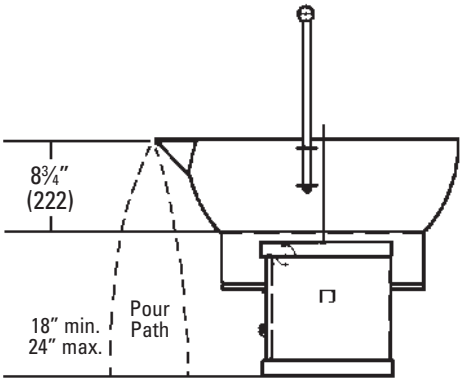

MODEL	PH	208V		240V		480V		BRIMFUL CAPACITY	4 OZ. SERVINGS
		KW	AMP	KW	AMP	KW	AMP		
VECTS16	1	7.5	36.0	7.5	31.3	–	–	16 gallons 60 liters	512
	3	7.5	20.8	7.5	18.1	7.5	9.0		

a division of ITW Food Equipment Group LLC

P.O. Box 696 ▪ Louisville, KY 40201 ▪ Toll-free: 1-800-814-2028 ▪ Local: 502-778-2791 ▪ Quote & Order Fax: 1-800-444-0602

NOTE: In line with its policy to continually improve its products, Vulcan reserves the right to change materials and specifications without notice.

Printed On Recycled Paper