TRUE MANUFACTURING CO., INC.
U.S.A. FOODSERVICE DIVISION
2001 East Terra Lane • O'Fallon, Missouri 63366-4434 • (636)240-2400
Fax (636)272-2408 • Toll Free (800)325-6152 • Intl Fax# (001)636-272-7546
Parts Dept. (800)424-TRUE • Parts Dept. Fax# (636)272-9471 • www.truemfg.com

Project Name: _____
Location: _____
Item #: _____ Qty: _____
Model #: _____

AIA #
SIS #

Model:
GDM-05-HC-LD

Glass Door Merchandiser:
Swing Door Counter-Top Refrigerator with Hydrocarbon Refrigerant & LED Lighting

GDM-05-HC-LD

- The world's #1 manufacturer of glass door merchandisers.
- True's commitment to using the highest quality materials and oversized refrigeration systems provides the user with colder product temperatures, and lower utility costs in an attractive merchandiser that brilliantly displays packaged food and beverages.
- Designed for convenient access, fast service, and attractive display.
- Factory engineered, self-contained, capillary tube system using environmentally friendly R290 hydro carbon refrigerant that has zero (0) ozone depletion potential (ODP), & three (3) global warming potential (GWP).
- High capacity, factory balanced refrigeration system that maintains cabinet temperatures of 33°F to 38°F (.5°C to 3.3°C) for the best in food preservation.
- Exterior - non-peel or chip black laminated vinyl; durable and permanent.
- Interior - attractive, NSF approved, white aluminum interior liner with stainless steel floor.
- Self closing door. Positive seal, torsion type closure system.
- "Low-E", double pane thermal insulated glass door assembly with mitered plastic channel frame. The latest in energy efficient technology.
- LED interior lighting provides more even lighting throughout the cabinet. Safety shielded.
- Entire cabinet structure is foamed-in-place using a high density, polyurethane insulation that has zero ozone depletion potential (ODP) and zero global warming potential (GWP).

ROUGH-IN DATA

Specifications subject to change without notice.
Chart dimensions rounded up to the nearest ⅛" (millimeters rounded up to next whole number).

Model	Doors	Shelves	Cabinet Dimensions (inches) (mm) W	D†	H*	HP	Voltage	Amps	NEMA Config.	Cord Length (total ft.) (total m)	Crated Weight (lbs.) (kg)
GDM-05-HC-LD	1	2	24 610	23½ 597	37 940	⅕ N/A	115/60/1	2.7 N/A	5-15P	9 2.74	180 82

† Depth does not include 1⅜" (35 mm) for door handle.
* Height does not include 1" (26 mm) for system mechanical components.

MADE WITH INNOVATION IN THE USA · 5 YEAR COMPRESSOR WARRANTY USA · ENERGY STAR · c UL us · CLASSIFIED UL EPH · natural refrigerant.

APPROVALS:

AVAILABLE AT:

Printed in U.S.A.

Model:
GDM-05-HC-LD

Glass Door Merchandiser:
Swing Door Counter-Top Refrigerator with Hydrocarbon Refrigerant & LED Lighting

STANDARD FEATURES

DESIGN
- True's commitment to using the highest quality materials and oversized refrigeration systems provides the user with colder product temperatures, and lower utility costs in an attractive merchandiser that brilliantly displays packaged food and beverages.

REFRIGERATION SYSTEM
- Factory engineered, self-contained, capillary tube system using environmentally friendly R290 hydrocarbon refrigerant that has zero (0) ozone depletion potential (ODP), & three (3) global warming potential (GWP).
- High capacity, factory balanced refrigeration system that maintains cabinet temperatures of 33°F to 38°F (.5°C to 3.3°C) for the best in food preservation.
- State of the art, electronically commutated evaporator and condenser fan motors. ECM motors operate at higher peak efficiencies and move a more consistent volume of air which produces less heat, reduces energy consumption and provides greater motor reliability.

CABINET CONSTRUCTION
- Exterior - non-peel or chip black laminated vinyl; durable and permanent.
- Interior - attractive, NSF approved, white aluminum liner with stainless steel floor.
- Insulation - entire cabinet structure is foamed-in-place using a high density, polyurethane insulation that has zero ozone depletion potential (ODP) and zero global warming potential (GWP).
- Cabinet fitted with leg levelers.
- Illuminated exterior sign panel. Variety of sign options available.

DOOR
- "Low-E", double pane thermal insulated glass door assembly with mitered plastic channel frame. The latest in energy efficient technology.
- Door fitted with 12" (305 mm) long extruded handle.
- Self closing door. Positive seal, torsion type closure system.
- Magnetic door gasket of one piece construction, removable without tools for ease of cleaning.

SHELVING
- Two (2) adjustable, heavy duty PVC coated wire shelves 19½"L x 18"D (496 mm x 458 mm). Four (4) chrome plated shelf clips included per shelf.
- Shelf support pilasters made of same material as cabinet interior; shelves are adjustable on ½" (13 mm) increments.

LIGHTING
- LED interior lighting provides more even lighting throughout the cabinet. Safety shielded.

MODEL FEATURES
- Evaporator is epoxy coated to eliminate the potential of corrosion.
- See our website www.truemfg.com for latest color and sign offerings.
- NSF/ANSI Standard 7 compliant for open food product.

ELECTRICAL
- Unit completely pre-wired at factory and ready for final connection to a 115/60/1 phase, 15 amp dedicated outlet. Cord and plug set included.

115/60/1
NEMA-5-15R

OPTIONAL FEATURES/ACCESSORIES
Upcharge and lead times may apply.
- ❑ 4" (102 mm) legs.
- ❑ White exterior.
- ❑ Stainless steel exterior.
- ❑ Red wine thermostat.
- ❑ White wine thermostat.
- ❑ Chocolate thermostat.
- ❑ Barrel lock (factory installed).
- ❑ Additional shelving.
- ❑ 1¼" (32 mm) pricing strips.

PLAN VIEW

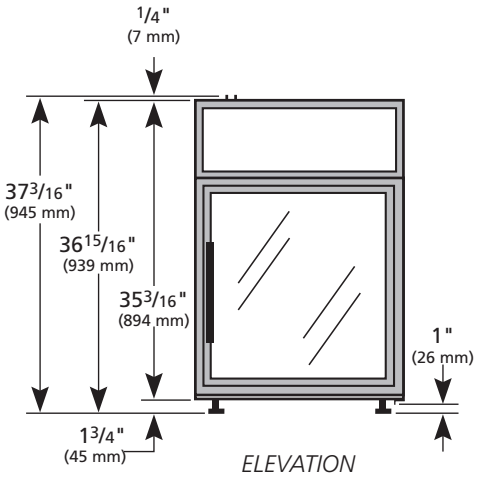

ELEVATION

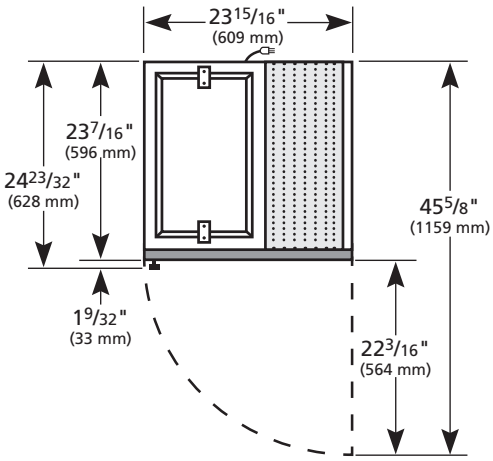

PLAN VIEW

WARRANTY
Three year warranty on all parts and labor and an additional 2 year warranty on compressor. (U.S.A. only)

METRIC DIMENSIONS ROUNDED UP TO THE NEAREST WHOLE MILLIMETER

SPECIFICATIONS SUBJECT TO CHANGE WITHOUT NOTICE

Model	Elevation	Right	Plan	3D	Back
GDM-05-HC-LD					

TRUE MANUFACTURING CO., INC.
2001 East Terra Lane • O'Fallon, Missouri 63366-4434 • (636)240-2400 • Fax (636)272-2408 • Toll Free (800)325-6152 • Intl. Fax# (001)636-272-7546 • www.truemfg.com