PRINCECASTLE®
MARMON FOODSERVICE TECHNOLOGIES
A BERKSHIRE HATHAWAY COMPANY

740 SERIES
SINGLE-FUNCTION TIMERS

The 740 Series Single-Function Timers are the next generation of timing systems designed to be easier to use, give you more flexibility, and ensure utmost accuracy. They feature an ultra-slim design with a "fat plug" transformer. Two, four, eight and twelve channel units are available.

740-T2

740-T4

740-T8

740-T12

Ideal for many kitchen applications, including monitoring frying, grilling and prep stations, and tracking coffee-making and employee handwashing. Quite simply, if a kitchen task needs to be timed or monitored, Prince Castle timers can help manage these tasks.

These simple-to-use timers countdown in hours and minutes or minutes and seconds. Up and down scan buttons make each channel easy to program. Each channel is activated with a push of a button. A digital channel display shows the active channel.

LED channel indicators change colors during the timing cycle depending on the stage of the countdown: the light is green during the first 70% of the cycle, then turns yellow during the next 20% of the cycle, and finally turns red during the last 10% of the cycle. A dual tone volume alarm and flashing channel indicator alert the operator when timing is complete.

FEATURES

- Digital channel display shows the active channel.
- New multi-colored LED channel indicators show the status of the timing cycle and provide early warning as the countdown expires.
- Lightweight ultra-slim 1 inch (2.5 cm) thick design and extra long 10 foot (3 m) line cord let you mount these units virtually anywhere.
- Each channel can be programmed independently, and all channels can be used simultaneously.
- The two-tone alarm is adjustable for either high or low sound levels.
- Includes menu labels to identify channels: Burgers, Steak, Chicken, Fish, Fries and blank stickers.
- Includes set of 3-1/2 inch (8.9 cm) mounting brackets. For increased mounting flexibility, flush mount brackets are available.
- One year warranty.

Designs and Specifications are subject to change without notice.

355 East Kehoe Blvd, Carol Stream, IL 60188
Tel: 630-462-8800 Fax: 630-462-1460 Toll Free: 800-PCASTLE www.princecastle.com

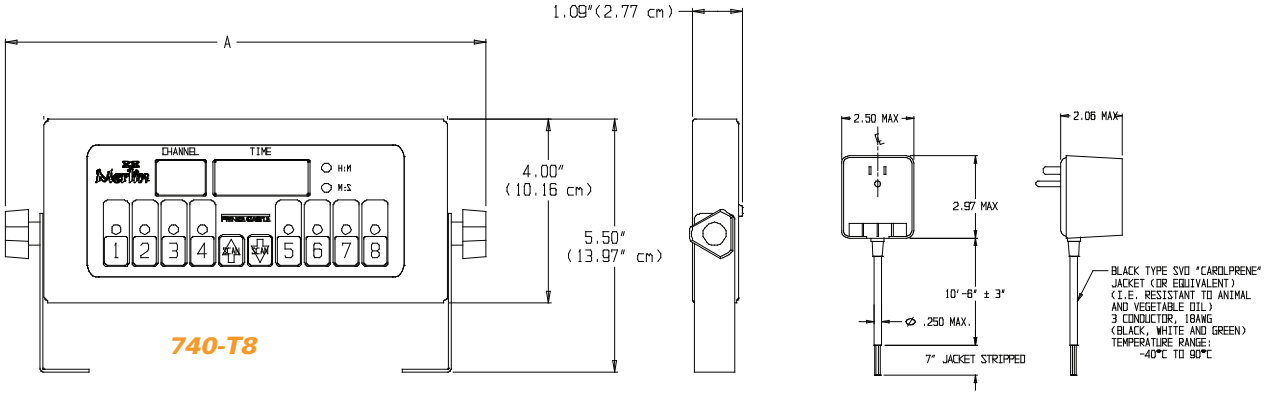

DIMENSIONS

Model Number	Width in(cm)	Height in(cm)	Depth in(cm)	Shipping Weight lb(kg)	Shipping cu.ft (cu.m)
740-T2	7.87 (19.99)	4.00 (10.16)	1.09 (2.77)	4.00 (1.80)	.30 (.01)
740-T4	8.93 (22.68)	4.00 (10.16)	1.09 (2.77)	4.00 (1.80)	.30 (.01)
740-T8	10.43 (26.49)	4.00 (10.16)	1.09 (2.77)	5.00 (2.30)	.30 (.01)
740-T12	12.93 (32.84)	4.00 (10.16)	1.09 (2.77)	5.00 (2.30)	.32 (.01)

ELECTRICAL INFORMATION:

Model Number	Description	Volts	Hz	Watts	Amps	Plug Number
740-T2	2-Channel Single-Function Timer	120	60	10 max	.083 max	NEMA 5-15P
740-T4	4-Channel Single-Function Timer	120	60	10 max	.083 max	NEMA 5-15P
740-T8	8-Channel Single-Function Timer	120	60	10 max	.083 max	NEMA 5-15P
740-T12	12-Channel Single-Function Timer	120	60	10 max	.083 max	NEMA 5-15P

CERTIFICATIONS

355 East Kehoe Blvd, Carol Stream, IL 60188
Tel: 630-462-8800 Fax: 630-462-1460 Toll Free: 800-PCASTLE www.princecastle.com