4" OD DRAFT ARMS - GLYCOL COOLED

POLISHED CHROME			
PART NO.	OVERALL HEIGHT	FAUCET HEIGHT	NO. OF FAUCETS
*4028	14"	10-1/2"	3
4029	14"	10-1/2"	4

TARNISH-FREE BRASS			
PART NO.	OVERALL HEIGHT	FAUCET HEIGHT	NO. OF FAUCETS
*4028TF	14"	10-1/2"	3
4029TF	14"	10-1/2"	4

** Faucet height of center faucet is 11-1/8" on draft arms with three faucets.*

JOB	
AREA	
ITEM NO.	
MODEL NO.	

MODELS
4028
4028TF
4029
4029TF

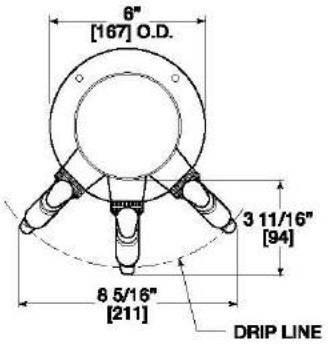

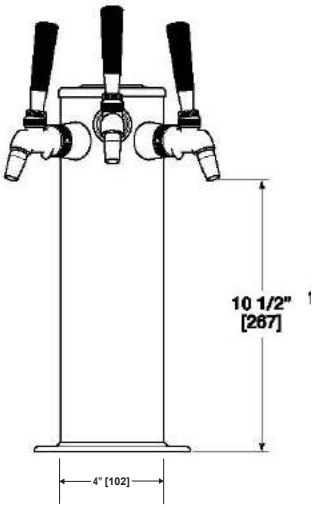

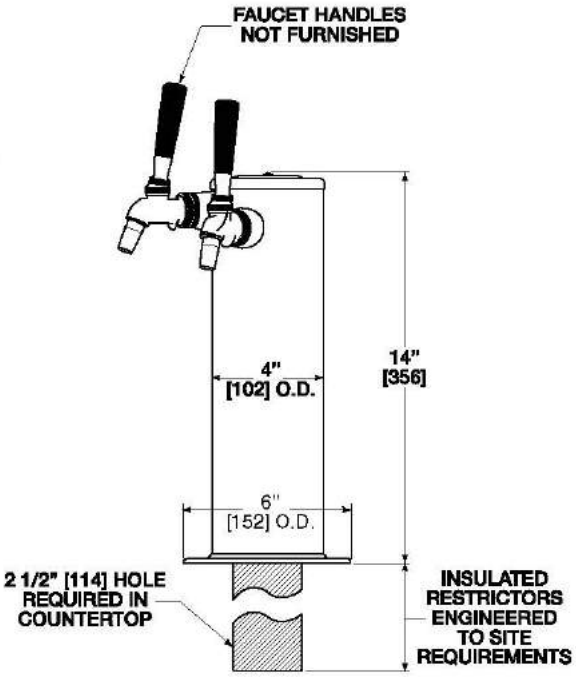

Form No. 060196Q
Rev. 06.14.2017
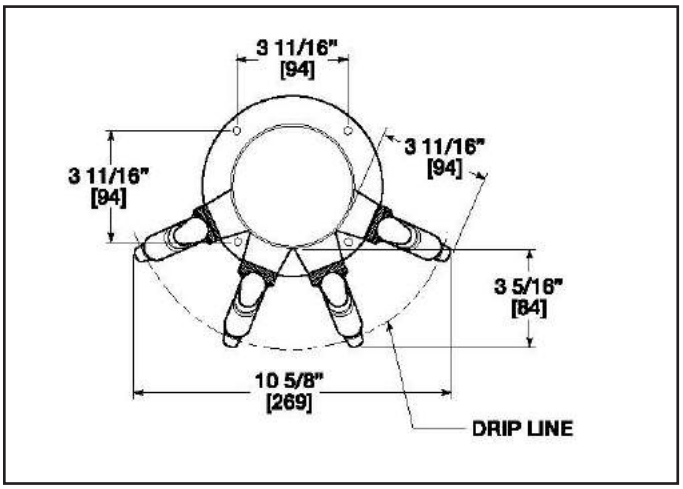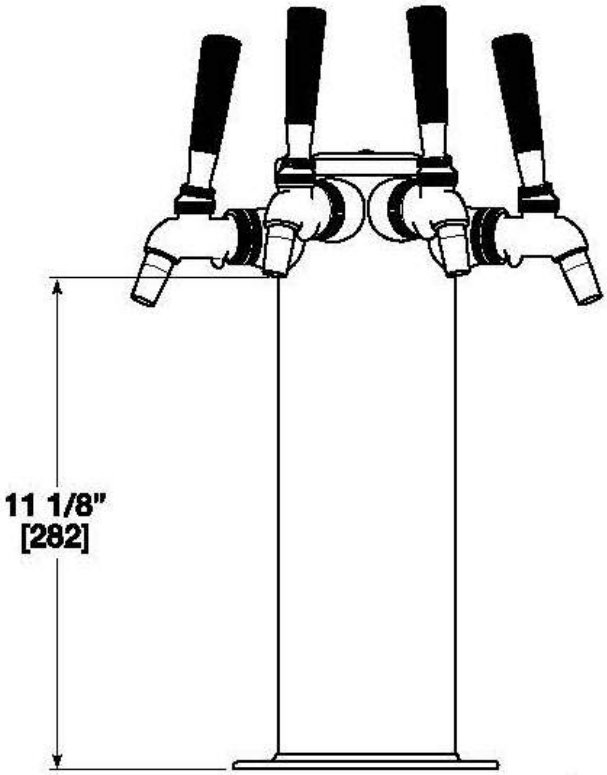
4” OD DRAFT ARMS - GLYCOL COOLED