JOB:
ITEM:
QTY:

Made in the USA

LIFETIME BUN PAN RACKS

APPLICATION:
These bun pan racks are built to last. Heavy-duty design is guaranteed for life, so you will never need another pan rack.

MATERIAL:
Uprights are constructed out of 1 1/2”x 1 13/4”x.070” wall D-Tube. Angle runners are constructed out of 1 1/4” x2”x.100” wall angle. Base is constructed out of 1 1/2”x1 1/2”x.070” wall tubing.

CASTERS:
These racks come equipped with four 6”x2” platform type swivel casters.

GUARANTEE:
These racks carry a **Lifetime Guarantee** against rust and corrosion and also a **Lifetime Guarantee** against workmanship and material defects.

Model #4331

Phone:800-255-0104
Fax: 877-877-7687
www.newageindustrial.com
sales@newageindustrial.com

New Age Industrial reserves the right to modify or make changes at any time without notice to materials and specifications.

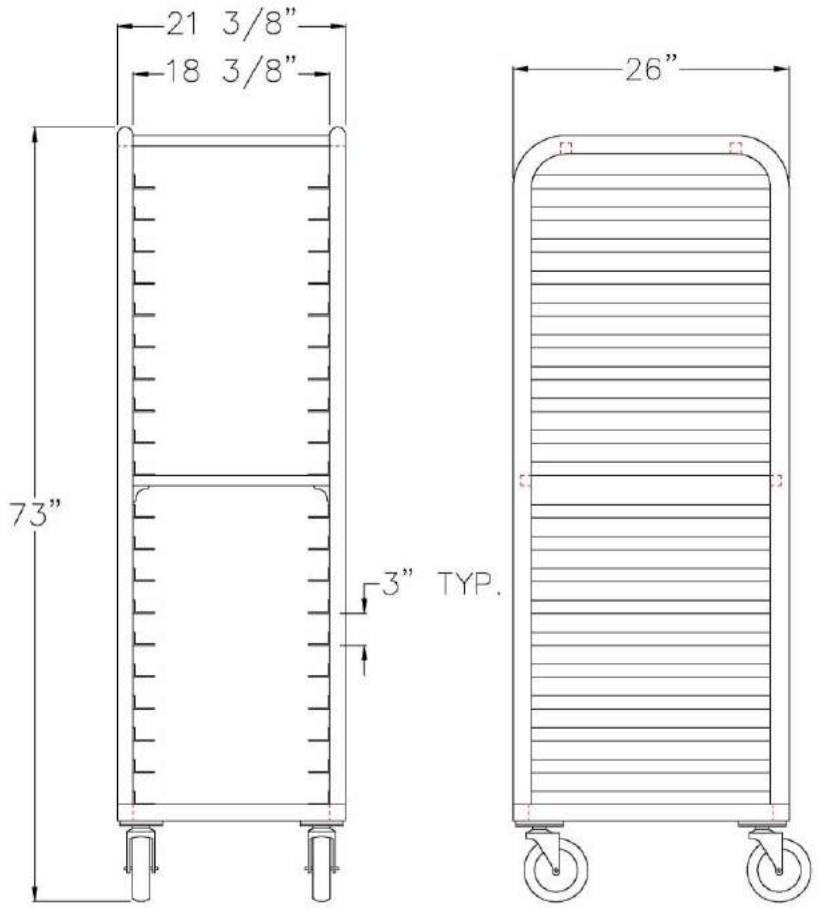

Model #4331

Model No.	Size-W	Size-H	Size-D	Runner Spacing	Pan Cap.
4330	21 3/8"	73"	26"	2"	30
4331	21 3/8"	73"	26"	3"	20
4332	21 3/8"	73"	26"	4"	15
4333	21 3/8"	73"	26"	5"	12

Phone:800-255-0104
Fax: 877-877-7687
www.newageindustrial.com
sales@newageindustrial.com

New Age Industrial reserves the right to modify or make changes at any time without notice to materials and specifications.