Item # _____ C.S.I. Section 11420

HEAVY DUTY COOKING

HEAVY DUTY GAS RANGE
INFRARED UPRIGHT BROILERS
36" WIDE GAS RANGE

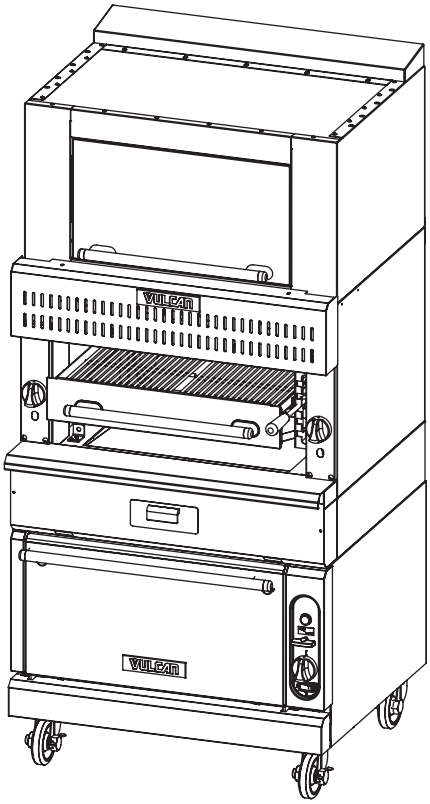

Model VIR1CF
(shown on a convection oven base)

- ☐ **VIR1F** Modular (* for refrigerated base mount only)
- ☐ **VIR1BF** Cabinet Base
- ☐ **VIR1SF** Standard Oven Base
- ☐ **VIR1CF** Convection Oven Base

STANDARD FEATURES

- ☐ Stainless steel front, front top ledge, sides, base, and finishing oven with 1¼" rear gas connection (capped)
- ☐ 1¼" diameter front gas manifold
- ☐ Four each 25,000 BTU/hr. infrared burners
- ☐ 50,000 BTU/hr. standard oven burner
- ☐ 32,000 BTU/hr. convection oven burner
- ☐ Pilot ignition system
- ☐ Infinite heat controls – 2 each
- ☐ Spring balanced, 5 position grid
- ☐ Full width, floating s/s drip pan
- ☐ 25"w x 25"d cooking grid (625 sq. inches)
- ☐ Grid of cold rolled steel bar
- ☐ 6" adjustable stainless steel legs for “S”, “B” and “C” models
- ☐ Universal rack guides, one removable shelf on “B” models
- ☐ One year limited parts and labor warranty

OPTIONAL FEATURES (Factory Installed)

- ☐ Cap and cover front manifold
- ☐ Stainless steel oven cavity, burner box and exterior range bottom
- ☐ 650°F oven thermostat and steel hearth. (“S” models)
- ☐ Fan cooling package. (“C” models)
- ☐ Less legs for dolly mounting of cabinet base models
- ☐ 3" high toe base for curb mounting for “S”, “B”, and “C” models

ACCESSORIES (Packaged & Sold Separately)

- ☐ ¾", 1", or 1¼" gas pressure regulator (specify gas type – pack loose)
- ☐ Set of 4 casters, 6" high (two locking)
- ☐ 6" adjustable flanged feet for cabinet base models
- ☐ Extra removable shelves for use with Universal rack guides (for cabinet base)
- ☐ Banking strip
- ☐ Flexible gas hose with quick disconnect & restraining device

SPECIFICATIONS

36" wide heavy duty gas range, Vulcan Model No. VIR1F (modular), VIR1BF (cabinet base), VIR1SF (standard oven base), or VIR1CF (convection oven base). Stainless steel front, front top ledge, sides, base, stub back and top. 1¼" diameter front gas manifold. Four 25,000 BTU/hr. ceramamic tile faced infrared burners. **Standard Oven:** 50,000 BTU/hr. with porcelain oven bottom, side and indoor panel. **Convection Oven:** 32,000 BTU/hr. with porcelain oven bottom, side and interior door panel (115v-1 phase blower motor, 4 amps, 9' cord and plug). Oven measures 27"w x 27" d x 13" h. Standard oven thermostat adjusts from 150° – 550°F, Convection oven from 175° – 550°F, and the optional 650° oven for standard ovens, 300° – 650°F. Total input 100,000 BTU/hr.

Exterior Dimensions:

42⅝"d x 36"w x 77⅛"h on casters

a division of ITW Food Equipment Group LLC

P.O. Box 696 ▪ Louisville, KY 40201 ▪ Toll-free: 1-800-814-2028 ▪ Local: 502-778-2791 ▪ Quote & Order Fax: 1-800-444-0602

HEAVY DUTY GAS RANGE
INFRARED UPRIGHT BROILERS
36" WIDE GAS RANGE

INSTALLATION INSTRUCTIONS

1. A properly sized gas pressure regulator suitable for battery or single unit application must be furnished and installed. Natural gas 6.0" W.C., propane gas 10.0" W.C.
2. An adequate ventilation system is required for commercial cooking equipment. Information may be obtained by writing to the National Fire Protection Association, 1 Batterymarch Park, Quincy, MA 02269, www.NFPA.org. When writing, refer to NFPA No. 96.
3. These units are manufactured for installation in accordance with ANSZ223.1A (latest edition), National Fuel Gas Code. Copies may be obtained from The American Gas Association, 400 N Capitol St. NW, Washington, DC 20001, www.AGA.org.
4. **Clearances**

	Rear	Sides
Combustible	6"	6"
Non-combustible	0"	0"

5. For proper combustion, install equipment on adjustable legs or casters. On curb or platform, allow 3½" front overhang. Toe base with leveling bolts are required for curb installation. Specify when ordering.
6. Cannot be batteried with GH series equipment.
7. This appliance is manufactured for commercial installation only and is not intended for home use.

NOTE: In line with its policy to continually improve its product, Vulcan reserves the right to change materials and specifications without notice.

Specify type of gas when ordering.
Specify altitude when above 2,000 feet.

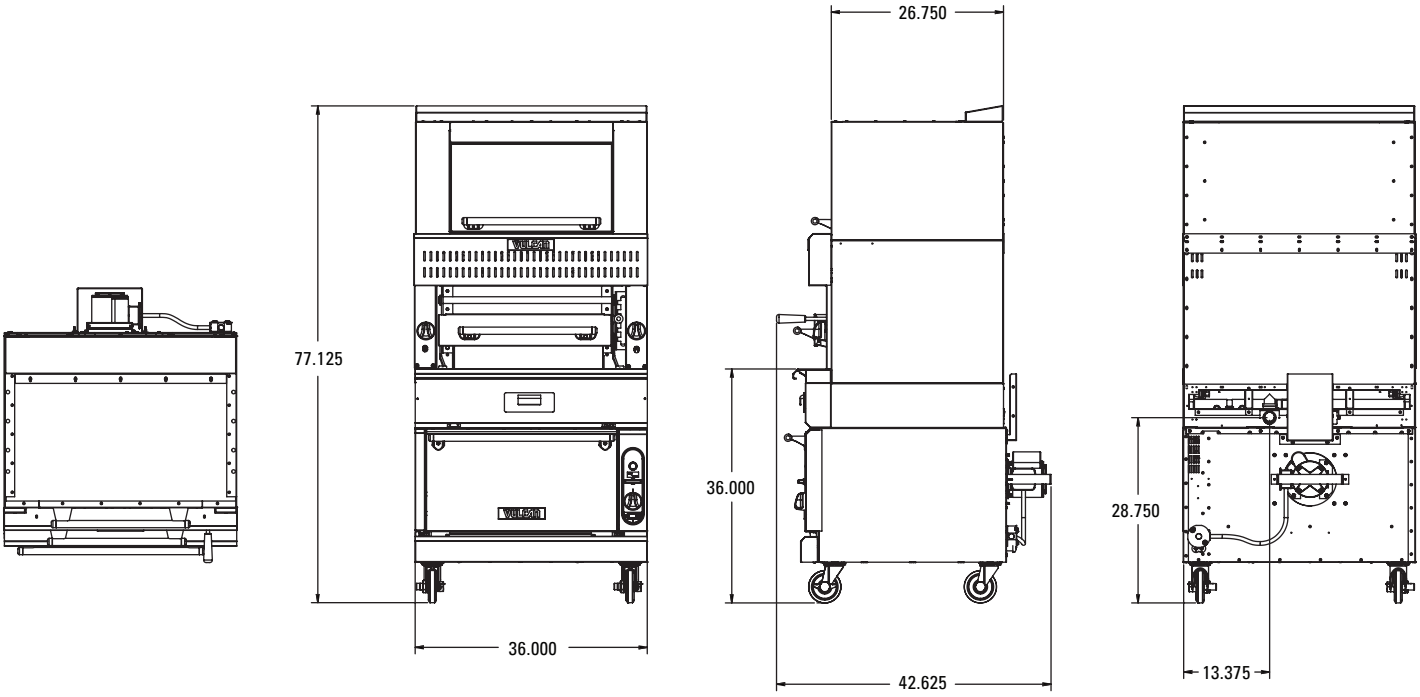

MODEL NUMBER	DESCRIPTION	TOTAL INPUT BTU / HR	SHIPPING WEIGHT LBS / KG
VIR1F	Upright Infrared Broiler / Modular*	100,000	675 / 304
VIR1BF	Upright Infrared Broiler / Cabinet Base	100,000	675 / 304
VIR1SF	Upright Infrared Broiler / Standard Oven Base	150,000	765 / 344
VIR1CF	Upright Infrared Broiler / Convection Oven Base	132,000	875 / 394

a division of ITW Food Equipment Group LLC

P.O. Box 696 ▪ Louisville, KY 40201 ▪ Toll-free: 1-800-814-2028 ▪ Local: 502-778-2791 ▪ Quote & Order Fax: 1-800-444-0602

NOTE: In line with its policy to continually improve its products, Vulcan reserves the right to change materials and specifications without notice.

Printed On Recycled Paper