Outperform every day.™

Project:

Item Number:

Quantity:

ULTRA SERIES DROP-IN INDUCTION RANGES

ITEMS

69505	**Single Hob – NEMA 6-20P Plug**
69508	**Dual Hob, Front to Back – NEMA 6-50P Plug**

FEATURES

- 100 power settings for precise cooking control
- Controlled high-end temperatures for saute, stir fry, stock pot and sauce pot applications
- Sensitive low-end control for cooking delicate sauces, cremes, and chocolates
- Continuous duty induction circuitry for non-stop cooking
- 90% efficiency rating
- Double oversized fans for longer life
- Digital display is easy to clean – no knobs to collect food and helps prevent accidental temperature changes
- Control panel displays "HOT" warning for safety
- Control has 3' (91.4 cm) cord
- Drop-in has 6' (183 cm) cord with plug
- Two-year parts and labor warranty

DESCRIPTION

These high-efficiency, heavy-duty commercial drop-in induction ranges are designed for use in commercial kitchens and front-of-the-house cooking. They provide sensitive low-end control for cooking sauces, milks and chocolates as well as fast, high temperature cooking.

The ceramic top is easily cleaned with a mild cleaner.

The induction range is equipped with a variety of safety features including:

- Over-heat protection
- Small-article detection
- Pan auto-detection function
- Empty-pan shut-off

WARRANTY

All models shown come with Vollrath's standard warranty against defects in materials and workmanship. For full warranty details, please refer to www.Vollrath.com.

CLEARANCE AND ENVIRONMENT REQUIREMENTS

- This appliance is intended for use with induction-ready cookware. It is not intended to be used with aluminum pans with a metal disc on the bottom.
- All models require unrestricted intake and exhaust air ventilation for proper operation of the controls. The maximum intake temperature must not exceed 110°F (43°C). Temperatures are measured in ambient air while all appliances in the kitchen are in operation.
- Drop-in models require a minimum clearance of 3 inches (7.6 cm) at the rear and 1 inch (2.5 cm) at the bottom.

AGENCY LISTINGS

c UL us LISTED

NSF

FC This device complies with Part 18 FCC Rules.

Approvals	Date

Due to continued product improvement, please consult www.vollrath.com for current product specifications.

Outperform every day.™

www.vollrath.com

The Vollrath Company, L.L.C.
1236 North 18th Street
Sheboygan, WI 53081-3201 U.S.A.
Main Tel: 800.624.2051 or 920.457.4851
Main Fax: 800.752.5620 or 920.459.6573
Customer Service: 800.628.0830
Canada Customer Service: 800.695.8560

Technical Services
techservicereps@vollrathco.com
Induction Products: 800.825.6036
Countertop Warming Products: 800.354.1970
All Other Products: 800.628.0832

ULTRA SERIES DROP-IN INDUCTION RANGES

DIMENSIONS (Shown in inches (cm))

69505

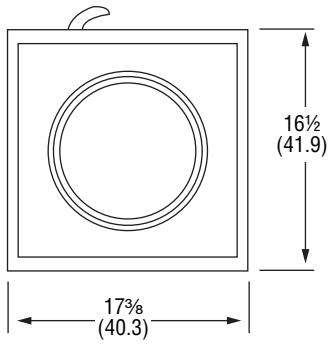

Top View

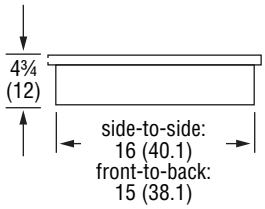

Side View

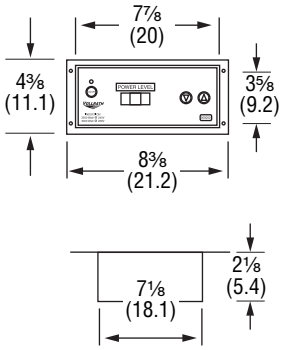

Control

69508

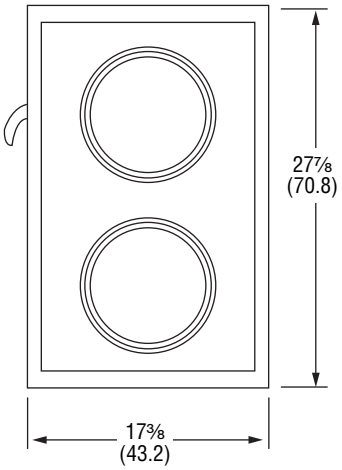

Top View

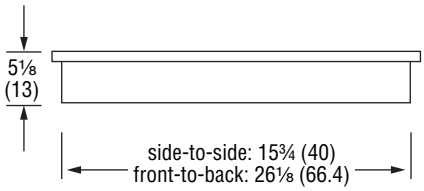

Side View

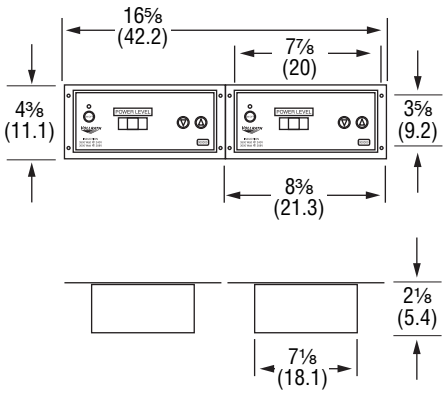

Control

SPECIFICATIONS

Item No.	Description	Max Pan Size	Drop-in Cutout	Control Cutout	Voltage	KW	Amps	Hz	Plug
69505	Single Hob	14 (35.6)	16⅛ x 15⅛ (40.9 x 38.4)	7¼ x 3⅞ (18.4 x 9.8)	208-240	3.0-3.5	14.6	50/60	NEMA 6-20P
69508	Dual Hob	12 (30.5)	26⅜ x 15⅞ (67 x 40.3)	7¼ x 3⅞ (x 2) (18.4 x 9.8) (x 2) Two control boxes. Minimum spacing is 16.2 (42.2)	208-240	3.0-3.5 Per Hob	29.2	50/60	NEMA 6-50P

Receptacles

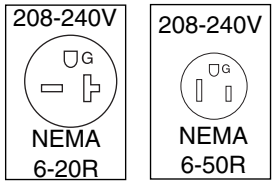

The Vollrath Company, L.L.C.

Outperform every day.™

www.vollrath.com

The Vollrath Company, L.L.C.
1236 North 18th Street
Sheboygan, WI 53081-3201 U.S.A.
Main Tel: 800.624.2051 or 920.457.4851
Main Fax: 800.752.5620 or 920.459.6573
Customer Service: 800.628.0830
Canada Customer Service: 800.695.8560

Technical Services
techservicereps@vollrathco.com
Induction Products: 800.825.6036
Countertop Warming Products: 800.354.1970
All Other Products: 800.628.0832

© 2018 The Vollrath Company L.L.C.

Form Number L35858 9/6/18
Printed in USA