KETTLES

Direct Steam, Tilting, Cabinet Base

MODELS: **DMT-6-6 (Unit has 2 – 6 Gallon Kettles)**
DMT-6-10 (Unit has 1 – 6 Gallon and 1 – 10 Gallon Kettle)

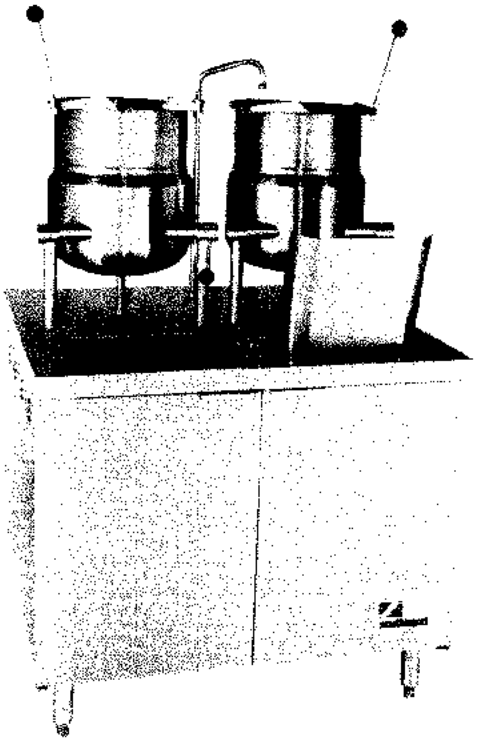

Model DMT-6-6 (36" Base)

OPERATION:

The unit operates at 15 psi (1 kg/cm²) and is equipped for operation on incoming steam pressure of 40-50 psi (2.8-3.5 kg/cm²) with a flow of 200 lbs (90 kg) per hour.

The controls shall be equipped for operation on:
☐ 115 VAC, 1 Phase, 60 Hz

OPTIONS:

☐ Lift-off stainless steel cover for kettle
☐ Lift-out stainless steel wire basket strainer

■ **INQUIRE TO FACTORY FOR SPECIAL OR CUSTOM REQUIREMENTS.**

Southbend Kettles offer unsurpassed versatility . . . rugged, dependable and are the most durable you can buy . . . up to 25% heavier than other competitive models, as proven by a comparison of shipping weights.

Assembly Structure

Each unit has two 6 gallon or one 6 gallon and one 10 gallon stainless steel steam jacketed trunnion kettles. They are mounted on a 32" high cabinet base. Hot and cold water fill faucet, 5" deep sink and drain and steam control valves are located on kettle leg. A removable splash guard grates are standard with unit.

Kettle

Direct connected, direct steam, tilting. A double wall kettle interior forms a steam jacket around lower 2/3 of kettle. Bottom of kettle is of elliptical design for superior heat circulation. Tubular stainless steel mounting frame has steam supply and condensate return pipes completely concealed within frame members. The sealed stainless steel tilt mechanism bearings permit kettle to tilt forward 90° for complete emptying and return to vertical when handle is released. A removable operating handle with heatproof knob is mounted on the left or right. Models have a single support leg with flush-inserted nylon foot.

Cabinet Base

Kettles are mounted on a cabinet base with full perimeter angle frame, reinforced counter and boiler mountings, direct steam boiler with controls, all stainless steel exterior, hinged doors with magnetic latches and 6" (152mm) stainless steel legs with adjustable bullet feet.

Technical Data

Unit dimensions, utility information, construction specifications and miscellaneous information is listed on the reverse side.

Warranty

One year Parts and Labor Warranty at no extra charge from the date of purchase.

We reserve the right to change specifications and product design without notice. Such revisions do not entitle the buyer to corresponding changes, improvements, additions or replacements for previously purchased equipment. Southbend has a policy of continuous product research and improvement.

Made in Canada

MODEL: ☐ DMT-6-6 ☐ DMT-6-10

Not for Scale
For Dimensional Purposes Only.

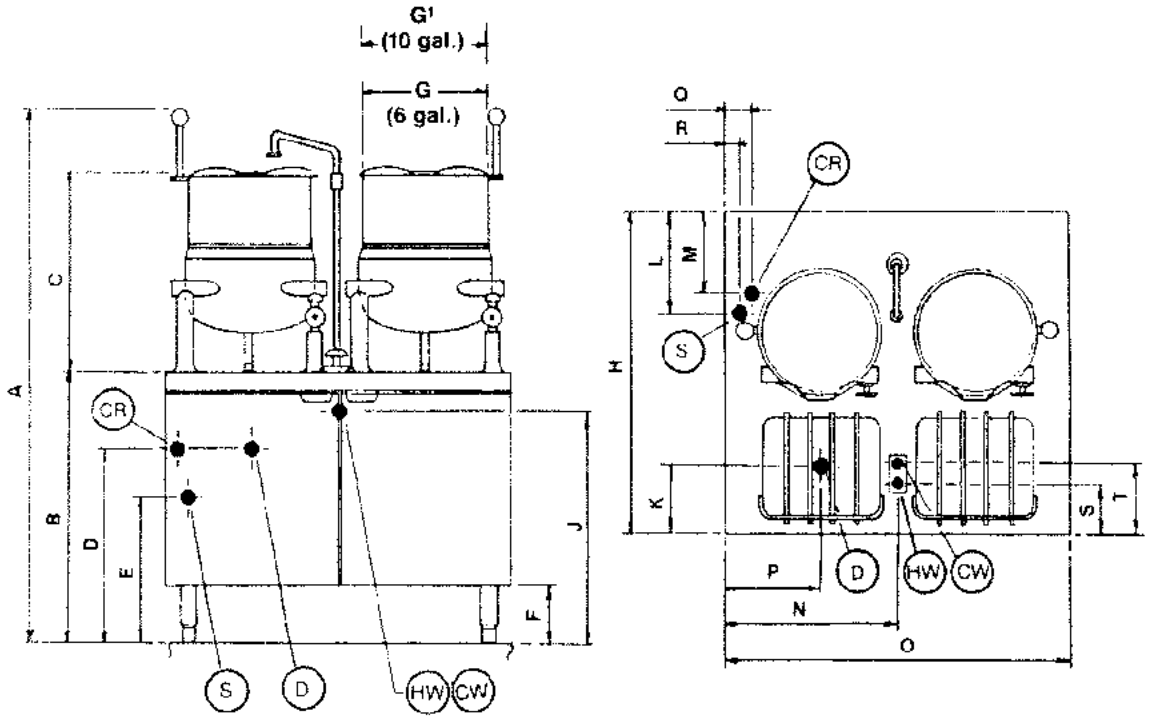

Specifications are subject to change without notice.

NOTE: Splash guard grates not shown on front view.

DIMENSIONS: ( ) = Millimeters

MODEL	A	B	C	D	E	F	G	G¹	H	J	K	L	M	N	O	P	Q	R	S	T
DMT-6-6	55" (1397)	32" (813)	19⅜" (492)	19" (483)	15" (381)	6" (152)	12" (305)	16" (406)	33" (838)	25½" (648)	9" (229)	13" (330)	9" (229)	18" (457)	36" (914)	9" (229)	3" (76)	2" (51)	4" (102)	7" (178)
DMT-6-10	55" (1397)	32" (813)	19⅜" (492)	19" (483)	15" (381)	6" (152)	12" (305)	16" (406)	33" (838)	25½" (648)	9" (229)	13" (330)	9" (229)	18" (457)	42" (1067)	9" (229)	3" (76)	2" (51)	4" (102)	7" (178)

SERVICE CONNECTIONS

CW Cold Water: ½" (13 mm) nominal tubing for cold water to kettle fill faucet.

HW Hot Water: 1/2" (13 mm) nominal tubing for hot water to kettle fill faucet.

DR Drain: 2" (51 mm) IPS piped to open floor drain. No solid connection.

SS Steam Stupply: 3/4" (19 mm) IPS for incoming steam at 5-50 PSI (0.4 to 3.4 kg/cm²).

CR Condensate Return: 1/2" (13 mm) CR is factory plumbed to drain, but can be optionally plumbed to supply boiler condensate return in the field.

** Pressure reducing valve is required if incoming pressures exceeds 50 PSI (3.4 kg/cm²).*

southbend

A MIDDLEBY COMPANY

Printed in U.S.A. Form ST39-40