Globe Slicer Accessories and Options

Vegetable Hopper (699-BAS)
- For slicing fruits, vegetables, lettuce for sandwiches, and cabbage for slaw
- Fits any Globe slicer
- 14”L x 7”W

Adjustable Food Fences
- Helps hold round or rectangular products to ensure quality slices and high yield
- 1047 (12”L x 1 3/8”H)
  1326 (12”L x 3”H)

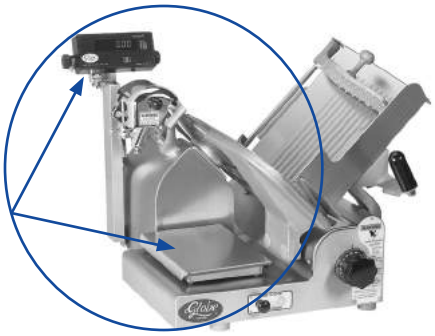

Portion Control Scale (PS13)
- Takes the guesswork out of slicing
- 10 lb. capacity x .01 lbs.
- Not a legal for trade scale

End Weight with Meat Prongs (PRONGS)
- Ideal for holding larger products in place while slicing
- Standard on Globe’s automatic slicers
- For 3600P and 4600P only. (Must be stated on the purchase order when slicer is ordered.)

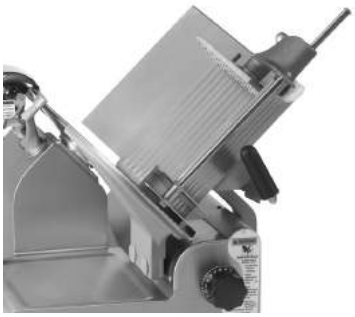

Front Mounted End Weight (FMEW)
- Features 16” of usable space for taller products
- End weight swivels to accommodate narrow or wide product
- Usable in conjunction with a food fence
- Specify if it is for a 3000P or 4000P series slicer when ordering

Lift Lever (LEVER)
- Lifts the slicer to an upright and tilted position
- Facilitates safe and easy cleaning
- Standard on Globe’s automatic slicers
- For 3600P and 4600P only. (Must be stated on the purchase order when the slicer is ordered.)

precisely.

GLOBE FOOD EQUIPMENT COMPANY
www.globeslicers.com

2153 Dryden Rd.
Dayton, OH 45439
Phone: 937-299-5493
Phone: 800-347-5423
Fax: 937-299-4147

Globe Slicer Accessories and Options

Extension Legs (873-SET)
- 3” legs enables easy access below the slicer making cleanup fast and easy
- Set of 4 legs

Slicer Cover (SC-SMALL or SC-LARGE)
- Ensures slicer stays clean when it is not in use

Factory Installed Options

These options must be stated on the purchase order when the slicer is ordered.

High Moisture Environment Package (MEATROOM)
- Specific parts are specially treated to prevent damage due to moisture
- Helps protect slicer from corrosion caused by extreme moisture applications
- Ideal for meatrooms

Stainless Steel Blade (SSK)
- For high acid content applications as found in vegetable and fruit preparation
- Also recommended for tempered (semi frozen) meat cutting

Prison Package (PRISON)

Globe offers the following modifications to its standard slicers in order to meet a typical prison specification.
- Removable sharpening assembly
- Slicer can be bolted down
- Food chute is bolted on
- Fasteners are Torx pin head tamper proof
- Inside support base of the slicer has been treated to prevent any oxidation in high moisture areas

Additional Accessories

- 15” food chute in lieu of 12” chute (LONGCHUTE)

Chefmate Slicer Accessories

Vegetable Hopper (A420VH)
- For slicing fruits, vegetables, lettuce for sandwiches, and cabbage for slaw
- Fits on the GC512 only
- 14”L x 7”W

GLOBE FOOD EQUIPMENT COMPANY
www.globeslicers.com

2153 Dryden Rd.
Dayton, OH 45439
Phone: 937-299-5493
Phone: 800-347-5423
Fax: 937-299-4147

Printed in U.S.A. 10-2009

Specifications are subject to change without notice.